4T.07 Parts Selection for SL100Torch Cutting

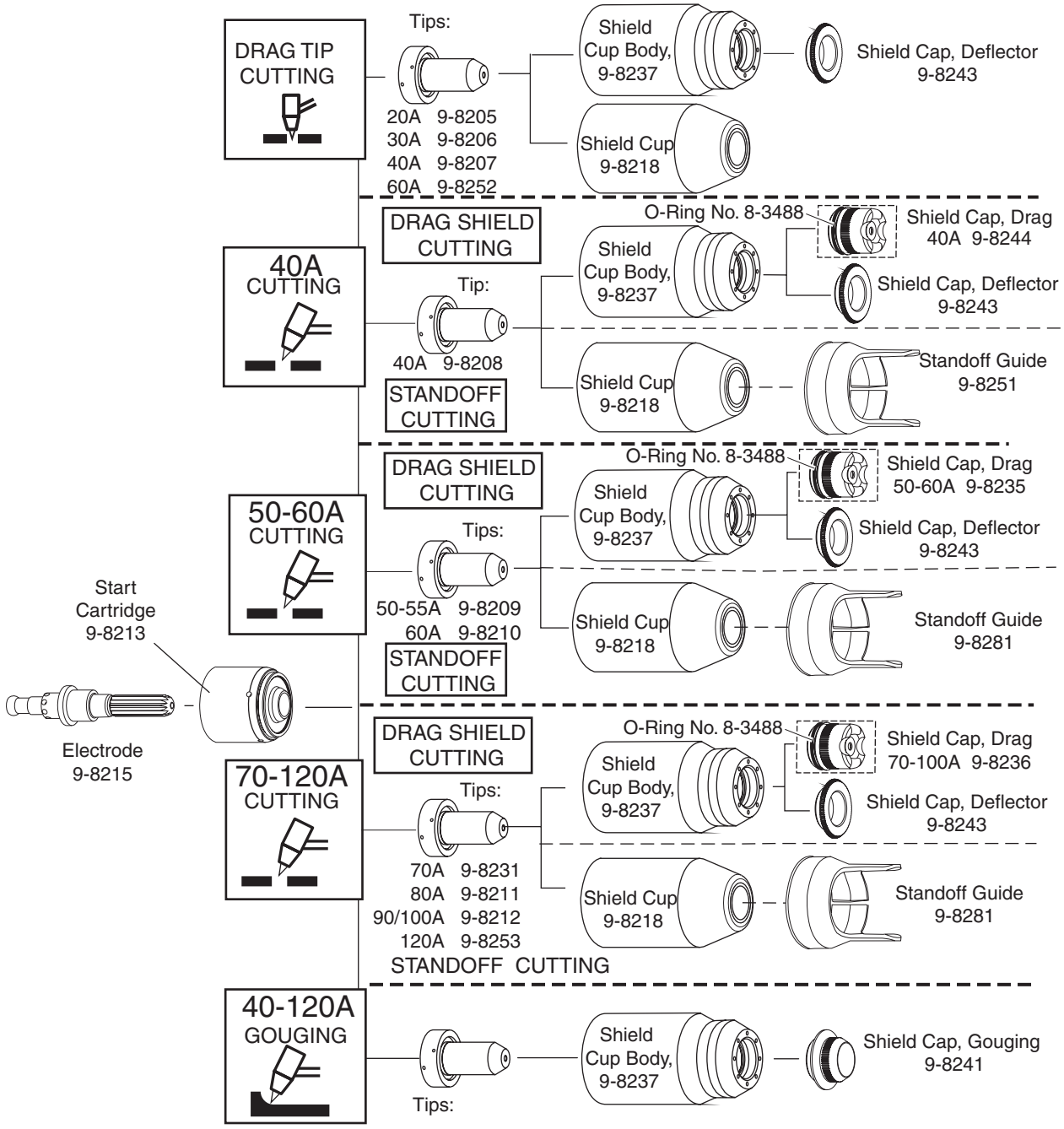

NOTE
CutMaster 52 uses 60A and less
CutMaster 82 uses 80A and less
CutMaster 102 uses 100A and less
CutMaster 152 uses 120A and less